# Multi-Phase Current Mode Step-Up DC/DC Controller

Akira Zone, Isabella Murillo, Dylan Thornburg

# LTSpice Schematic – LTC3862-2_DC1891.asc

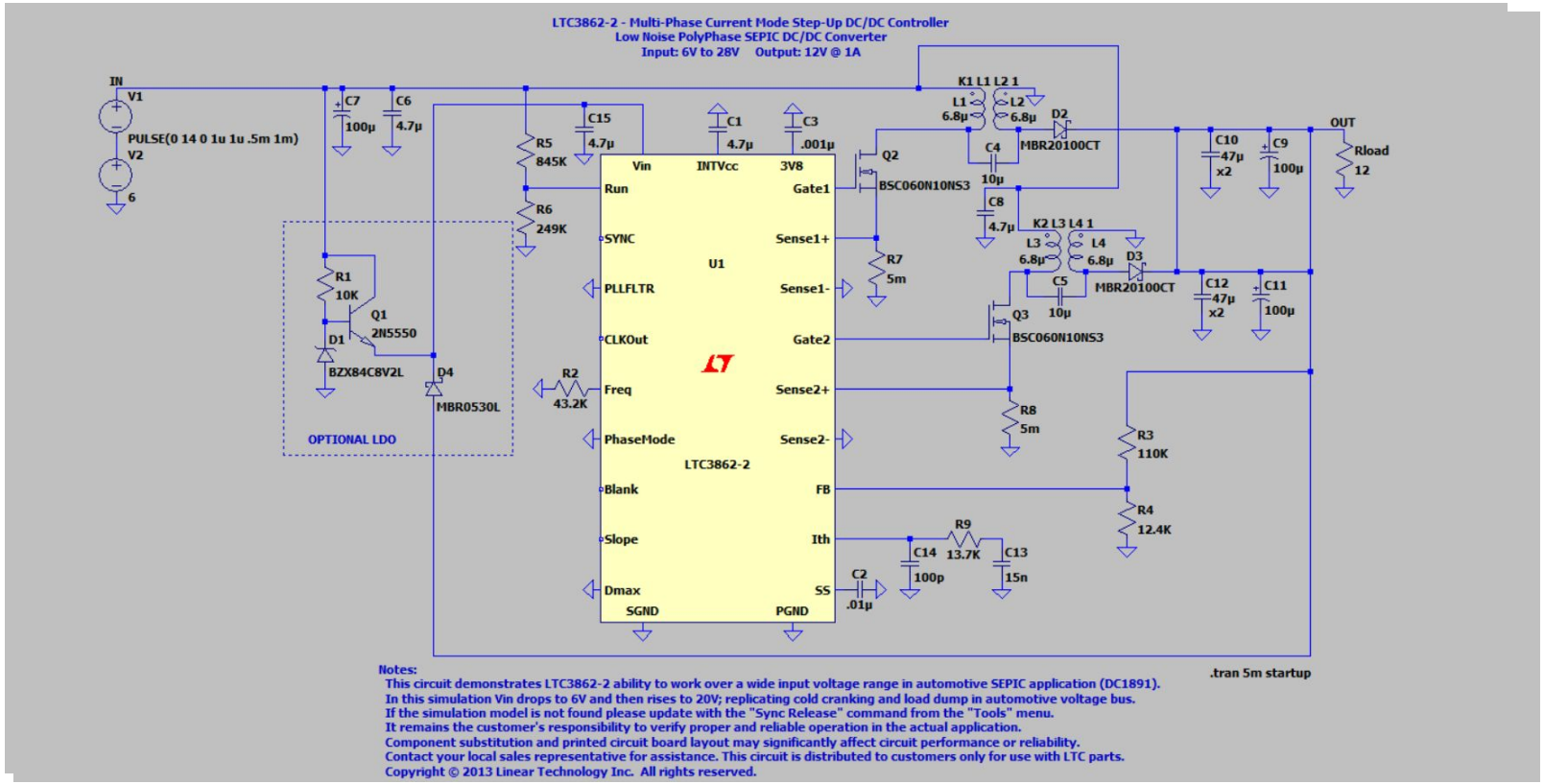

# LTSpice Schematic – LTC3862-2_DC1891.asc → V(out):

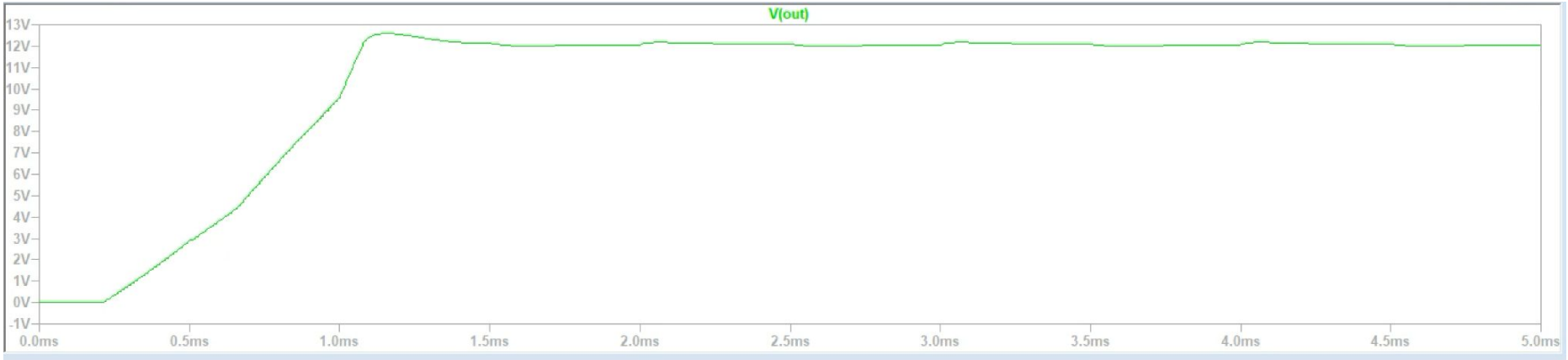

# Board: LTC3862-2

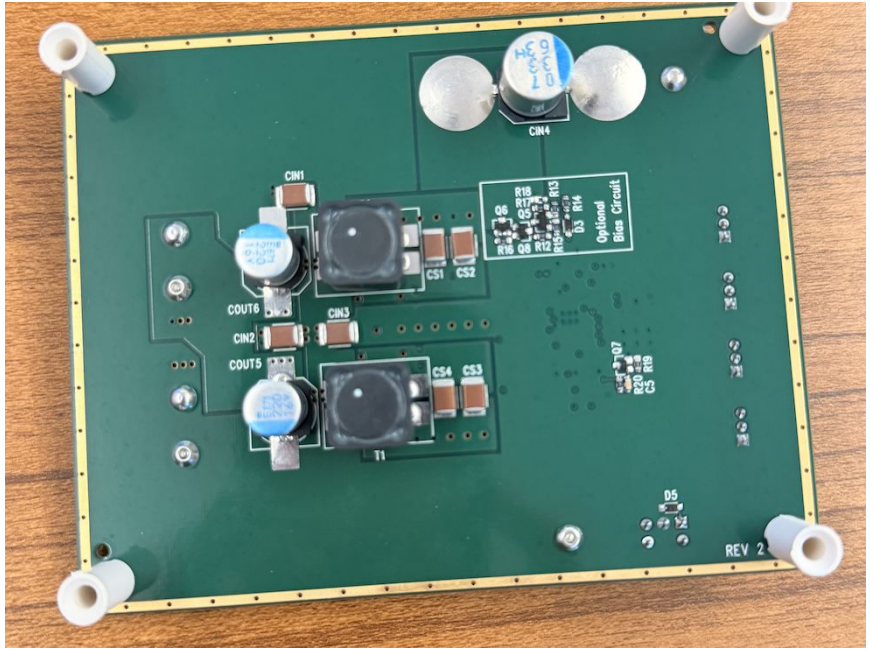


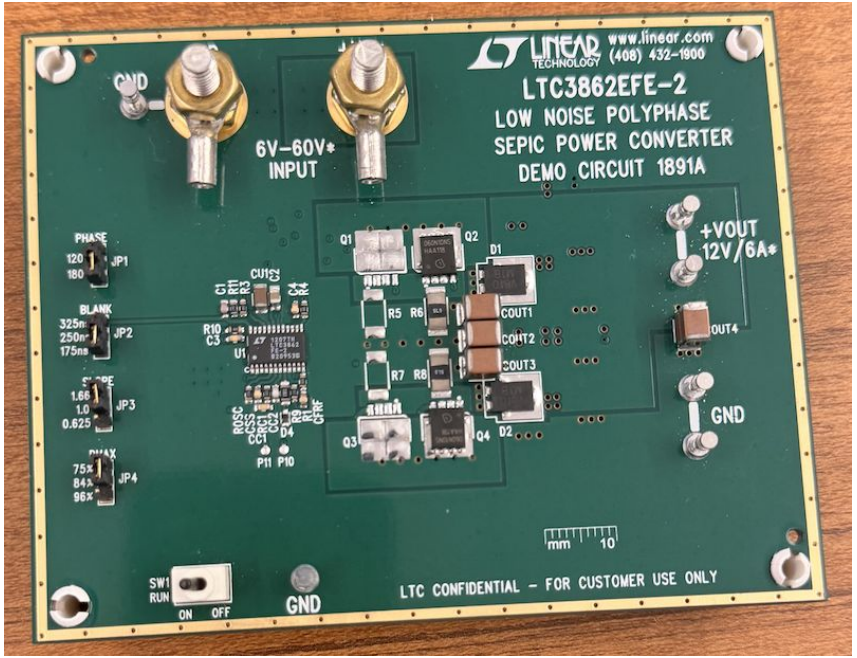

# Important Values

| | |
|---|---|
| $V_{in}$ | 5.5-36V |
| $I_{in}$ | Max: 3.0mA |
| $V_{FB}$ (Reference Voltage) | 1.223V |
| $R_{DS_ON}$ (pull up) | 3Ω |
| $R_{DS_ON}$ (pull down) | 0.9Ω |
| Inductor Selection | $L = \frac{V_{IN(MIN)}}{\Delta I_L \bullet f} \bullet D_{MAX}$ |
| Max Ripple Current (X = ripple) | $\Delta I_L = \frac{\chi}{n} \bullet \frac{I_{O(MAX)}}{1 - D_{MAX}}$ |
| | |

| | |
|---|---|
| Duty Cycle | $D = \left(\frac{V_O + V_F - V_{IN}}{V_O + V_F}\right) = t_{ON} \bullet f$ |
| Power Dissipated by MOSFET k = 1.7 | $P_{FET} = \left(\frac{I_{O(MAX)}}{n \bullet (1 - D_{MAX})}\right)^2 \bullet R_{DS(ON)} \bullet D_{MAX} \bullet \rho_T + k \bullet V_{OUT}^2 \bullet \frac{I_{O(MAX)}}{n \bullet (1 - D_{MAX})} \bullet C_{RSS} \bullet f$ |
| Max Duty Cycle | $D_{MAX} = \left(\frac{V_O + V_F - V_{IN(MIN)}}{V_O + V_F}\right)$ |
| Peak Current In Each Inductor | $I_{IN(PK)} = \frac{1}{n} \bullet \left(1 + \frac{\chi}{2}\right) \bullet \frac{I_{O(MAX)}}{1 - D_{MAX}}$ |
| Output Voltage | $V_{OUT} = 1.223V\left(1 + \frac{R2}{R1}\right)$ |
| Peak Inductor Current | $I_{D(PEAK)} = \frac{1}{n} \bullet \left(1 + \frac{\chi}{2}\right) \bullet \frac{I_{O(MAX)}}{1 - D_{MAX}}$ |
| Power Dissipated By The Diode | $P_D = I_{D(PEAK)} \bullet V_{F(PEAK)} \bullet (1 - D_{MAX})$ |
| Peak Current of Each Diode | $I_{D(PEAK)} = \frac{1}{n} \bullet \left(1 + \frac{\chi}{2}\right) \bullet \frac{I_{O(MAX)}}{1 - D_{MAX}}$ |